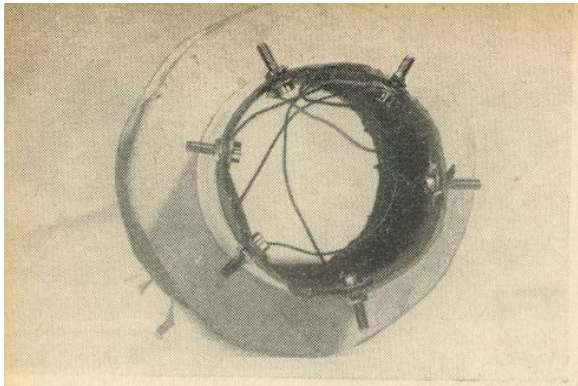

holes in the former at the beginning and end as before. The commencing wire of this ten-turn coil should be connected to terminal No. 1 (tighten up after connection) and the end of it goes to terminal No. 3 (do not tighten yet). Having finished the ten-turn aerial coil the first ring must be fixed to the former and the position for this is ¼ in. away from the bottom of the last winding.

Slide it on the former and force a little adhesive (preferably the waterproof type) between it and the coil former so as to glue them together. The next ring can then be fixed in the same way ¼ in. apart from the first, and then the third one leaving a space of ½ in. from the second one. You now will have to leave the former to dry overnight so that the rings are well fixed as the wire will strain them somewhat.

In the first (¼ in.) slot, the reaction winding of thirty turns is wound. Fix the wire at the beginning, as before, but simply wind the wire in the slot higgledy-piggledy, thirty turns of it. At the end you will have no room to make two holes, you will have to push your needle down the slot to make one hole and thread the end of your wire through it. If you pull it tight it should hold quite well. The beginning of this winding goes to terminal No. 5 and the end to No. 6, both terminals being tightened up.

Finally, the long-wave winding consists of 200 turns wound "anyhow" in the last slot to fill it completely. Start off by fixing your wire with two little holes, joining its bared end to terminal No. 3 with the other two wires on it, the terminal can then be tightened up. You can finish off by making a needle hole through the edge of the last ring threading the wire through it and through another hole at the foot of the former up to terminal No. 4 to which its bared end can be connected and the nut tightened up. That completes connections to all the terminals and the coil is made.

It is fixed to a baseboard or chassis by making a small fillet of wood, with a central screw-hole, just to fit inside the coil-former at the foot with the aid of a spot of glue. A screw or nut and bolt through the hole will fix the coil firmly. The connections to the coil are shown in Figure 2, an on-off switch across terminals 3 and 4 is required for long-wave purposes. When open it gives long-waves and when shut medium-waves.

I will defer the crystal receiver until the next article which will also combine the transistor amplifier. The theoretical diagram of the crystal set is shown in Figure 3, and uses the coil I have just described.

Reply to Reader's Radio Query

I intend to make the H.T. unit transformer from your book *Fun with Radio*. I have bought all the components except the transformer and I cannot obtain this from my usual supplier. Can you please give me the address of the Radio Supply Company?

Peter White (Berkhamsted, Herts)

I am glad to have this opportunity to answer Peter White's letter in B.O.P because it enables me to mention the buying of components which so many readers seem to find difficult. I can tell Peter White that the address of R.S.C (Leeds) Ltd., for Mail Orders, is 29-31 Moorfield Road, Leeds 12. This address, and the addresses of most other suppliers of radio parts, are printed in their advertisements in the monthly radio periodicals. Unless you live in London or one of the large cities where there are a number of radio component dealers you can only buy by Mail Order and to get the addresses of such dealers you should consult the radio papers. Public Libraries usually have one or two of these in the Reading Room or available on request, but if you are keen on radio I suggest you take one of these papers in addition to B.O.P.

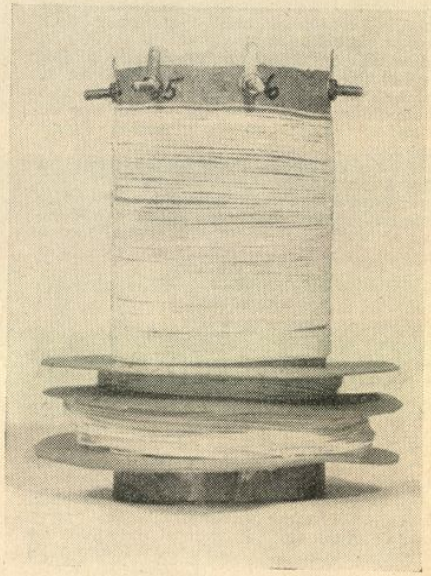

The two photos show different views of the completed coil with the internal connections and the numbered terminals

Davey Long- and Medium-wave coil with aerial and reaction windings

The images from the January and June 1961 editions of Boy's Own Paper are reproduced by kind permission of Lutterworth Press, for private non-commercial use only.

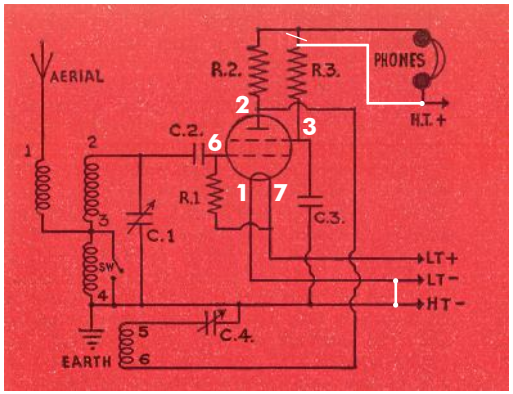

COMPONENTS LIST

Coil—home-made, see January 1961 B.O.P.
C.1 Variable condenser, solid dielectric 500 pF.
C.2 Fixed condenser 100 pF ceramic or mica.
C.3 Fixed condenser ·1 mF electrolytic or paper 150-volt wkg.
C.4 Variable condenser, solid dielectric or air dielectric 100 pF.
R.1 Resistor 2·2 MΩ ½-watt (or smaller wattage will do) } 20 per cent.
R.2 Resistor 10 KΩ ½-watt } tolerance
R.3 Resistor 22 KΩ ½-watt
On-off switch, B7G valveholder, two 2-hole socket strips.
Wire, solder, 2 knobs to suit condenser spindles, wood or metal chassis. 6 B.A nuts and bolts or wood screws.
Valve, 1T4 or Mullard DF91, etc. (see text).
Batteries 1·5 volt, 45 volt.

Above: This splendid example was kindly made for me by Hugh Castellan. The former is made from SRBP (Paxolin); windings are 26SWG enamelled copper wire, laquered after completion. I look forward to using this coil in a Davey design in due course.

Left: One-valver circuit and components list from June 1961 BOP, with corrections and valve connections in white (see text).

This coil has aerial, medium-wave, long-wave and reaction windings. Like most homebrew coils, this is a bulky item at around 4 inches high and 2 3/4 inches diameter. But this genuine Davey design is a worthy substitute for the commercially-made coils (Teletron D/R, Repanco DRR2) he often specified, provided sufficient space can be found for it. And if made as well as the example above, it will enhance any set!

The full article from January 1961 *Boy's Own Paper*, describing the coil's construction, is reproduced on pages 2 - 4 of this download. The article included a crystal circuit showing the reaction winding connected as an alternative aerial winding, but there were some errors and omissions. The coil connections were un-numbered, no value was given for the RF bypass capacitor, and the tuning capacitor, instead of 500pF or .0005µF, was specified as 500µF! The errors were corrected in the April 1961 *BOP*, which featured a transistor set with the same crystal front end. That article is not reproduced here, but the corrections (white text) have been added to the diagram overleaf.

The one-valver circuit and components list from June 1961 *BOP*, using the same coil - with the reaction winding connected as such - appears on this page. There were errors here too unfortunately: R3 should go direct to HT+, and HT- and LT- should be connected together (shown in white). We have also added the base connections to 1T4 / DF91 (which differ from those to DAF91 / DAF96 used in other versions of the Beginner's One-valver.)

Further articles describing two- and three-valve receivers using the same coil were promised, but it seems they were never published. The January (coil) and June (one-valver) articles were later combined and re-published in the *Boy's Own Companion No 4*, 1962, unfortunately with the same errors. Details for the coil itself were reprinted in *BOP* October 1962 and *Boy's Own Companion No 5*, 1963.

MAKE A Tuning Coil and Crystal Set

The first of a new series of Radio articles by GILBERT DAVEY. Next time he converts this simple coil into a transistor set for louder volume

IN the past two years many more B.O.P readers have become interested in Radio Set Construction, or would like to try to make a receiver of their own. So I have prepared a new series of articles which all stem out of one component I am going to tell you how to make for yourselves, a tuning coil. Every receiver must have a coil which is tuned to the frequency of the station it is desired to receive, and the more complex the receiver the more coils it will have.

The construction of this coil is described in this article and with it I show you how to build it into a crystal receiver. Next in the series I will convert the receiver into a transistor set for louder volume and follow that with a one-valve set. Each of these receivers uses just the one coil as does the fourth in the series which is a loud-speaker two-valve set. Finally, we construct two coils and make a sensitive three-valve receiver. Thus you will have a progressive series which, I hope, will interest both the beginners and the keen experimenters.

The first thing to do is to make the coil and for this you will need a piece of cardboard or paxolin tubing 2 in. in diameter and about 4 in. long. Also you will need some odd pieces of card and half a dozen 6 B.A bolts with a dozen nuts and washers. The wire used is 28 s.w.g d.c.c and you want a quarter-pound. The abbreviations mean, by the way, standard wire gauge and double-cotton-covered. First, let us consider the former on which we make our coil. If you can obtain one of bakelite or paxolin it would be ideal, but tubes of these materials are difficult to find these days.

A piece of cardboard tubing such as is used for sending documents through the post, or for containing plans, can probably be purchased at a stationer's shop and its outer diameter should be 2 in. The medium-wave coil will be wound on with the turns side by side but the reaction and long-wave windings are "pile-wound" in slots which are made by means of three rings cut out of some stiff card. These rings have an internal diameter of 2 in. to match the external diameter of the tube on to which they must firmly fit. The external diameter of the rings is about 2¾ in. which will give you, when fitted to the tube, two slots, side by side, each ¾ in. deep. Figure 1 makes all clear.

If you want to make your coil former extra effective it can be given a coat of shellac varnish both inside and out and then baked dry and hard in an oven. The rings should be treated similarly. This will prevent dampness in the air or changes of temperature being able to affect the somewhat absorbent cardboard former and causing a deterioration in the coil's efficiency.

If you live in a humid climate, and I know many B.O.P readers live outside the British Isles, it is essential to give the former the shellac varnish treatment before winding the coil and then to shellac varnish the whole of the coil again after it is wound so that the cotton covering of the coils cannot be affected by the damp. The treated coils must be dried gently (not baked-up) in a warm oven, or, if you can find any, hot sunshine.

Having obtained your coil former and cut out the rings, varnished them if you intend doing so, the next step is to fit the six nuts and bolts to the top of the former at equal distances round it about ⅛ in. from the top edge. The round head of the bolt with a washer should be inside the tube and another washer and a nut on the outside. The extra nut is for external wiring purposes. Do not tighten the nuts and bolts at this stage, "finger-tight" will be adequate as the various wires of the coil have to be connected to them.

Use a Cocoa Tin

Next with pencil, or, preferably, ball-point pen, mark the former beside each nut with its number, starting at 1 and ending beside it at 6. Figure 1 makes all these points clear and you must, of course, take care that the nuts and bolts are well spaced so that there is no possibility of one touching another; the circumference of a 2-in. diameter former is over 6 in. so that there is room for an inch spacing between the bolts.

Note here that you cannot use any form of metal tubing for coil-winding although there is no objection to constructing a cardboard tube by winding it around a tin, such as a cocoa tin, of the right diameter and sticking it down along the edges. But do use stout cardboard if you use this method, as otherwise the tube will collapse when the wire is wound on it.

The former being completed and the terminals in place at the top edge you can now proceed to wind on the wire. All the windings must be in the same direction so that I suggest you take the former with the top, i.e. the end with the nuts and bolts, in your left hand and wind on the wire with your right hand, winding always away from your body so that all the time the direction of winding will always be the same. If you have to put the job down unfinished you can remember quite easily the direction in which the windings went so as to maintain this when you start again. If you are left-handed, of course, you will reverse the hands.

In a well-made coil all connections are taken through the former and up inside the coil to the terminals (those are the nuts and bolts you have fixed at the top). To commence winding make two holes in the former about a ¼ in. from the top just below terminal No. 2, tiny holes such as a darning-needle would make, and thread the end of your wire through one hole into the former and up out of the former through the second hole and down through the first hole again. You will find the end of the wire now is inside the former and is anchored firmly to it.

Bare that end of wire and loop it neatly round under the washer of terminal No. 2 (you will have to loosen it a little to do this). Having made a neat connection here tighten up terminal 2 carefully with spanner or pliers.

Now carefully wind on your coil-former sixty-five turns of wire, each turn closely and neatly touching the previous one. It is a good idea to push the turns together with your thumb-nail from time to time as you wind but do not let any of the turns overlap. When you have completed sixty-five turns cut the wire, leaving 4 in. or so for connecting, make two small holes and, as before, in, out, in and fix the wire firmly to the former, making sure it is pulled tight so that all the turns of the coil are kept compactly together.

The end of the wire now inside the tube should be bared and connected to terminal No. 3 but do not fix the terminal firmly yet as other wires must go on it. Next wind on ten turns for the aerial winding commencing about the space of one turn away from the last winding and fixing the coil by means of two small

(Continued overleaf)

Gilbert Davey has written Fun with Radio *and* Fun with Short Waves, *both published by Edmund Ward Ltd. Now he is writing* Fun with Electronics

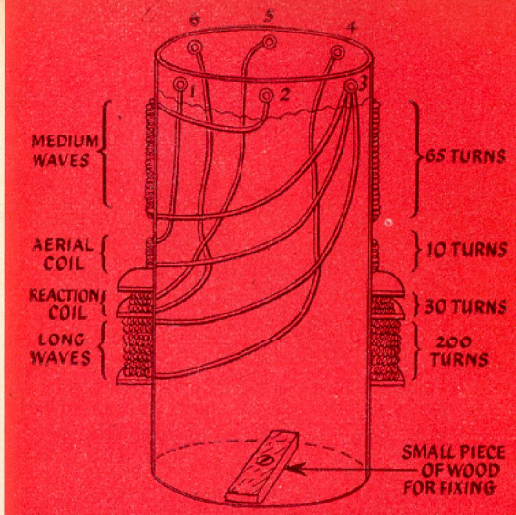

FIGURE 1

Components required for coil:
2 inch diameter former and card (see text)
¼ lb. reel 28 s.w.g d.c.c wire. (Available from Webb's Radio, 14 Soho Street, London W.1)
6 × 6 B.A bolts and 12 nuts and washers to suit
Small fillet of wood, glue, etc.

FIGURE 2
COIL CONNECTIONS

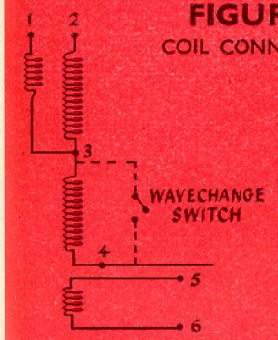

FIGURE 3
CRYSTAL RECEIVER