AT THE SHORT-WAVER'S BENCH - 10

Dirty contacts in the short-wave set; A curious aerial coupling effect; Variable control of the screening grid; The position of the reaction coil; Mains-fed output stages

First published in *Practical Wireless* on 6 July 1935.
Published without attribution, but authorship confirmed on Davey's own list.

Prepared from images kindly supplied by PW Publishing Ltd.

This is the third of three articles selected from Davey's 13-part series "At the Short-Waver's Bench", published in *Practical Wireless* almost every week from 20 April to 27 July 1935.

Like several of Davey's pre-war articles, this one covers several topics. One wonders whether articles like this were submitted as a whole, or as individual snippets that were stitched together by the editor.

Dirty contacts in the short-wave set

Dirty contacts seem to have been a constant problem for constructors in the early days, and Davey wrote several times on the need for cleanliness, especially for short-wave work. Components of the time such as terminals and switches were often of unplated brass. Later, nickel-plated brass became common in the interests of reliability, and now only gold plating is considered good enough for many switches, contacts and connectors.

A curious aerial coupling effect

The simple experiment described by Davey could easily be tried on any set (including several Davey designs) employing an inter-valve tuned circuit.

Variable control of the screening grid

Another simple idea for experiment, with increased scope if combined, as Davey suggests, with the previous idea.

The position of the reaction coil

Davey's second suggestion in this section - combining the aerial and reaction coils - more or less amounts to the Reinartz circuit shown in Download 7 (Experimental circuits).

Mains-fed output stages

No constructional details are given, and some components are not specified.

In particular, Davey does not give the manufacturer or type number of the new output pentode he recommends. Both the HT and LT for the output stage of this design are mains-derived. One wonders whether he might have considered avoiding hum issues by using this valve with battery power, with one or two accumulators for the heater, depending on its voltage rating. Perhaps he considered that he needed mains power anyway for sufficiently high HT voltage (rather than, say, two expensive HT batteries in series) to take advantage of the valve's characteristics.

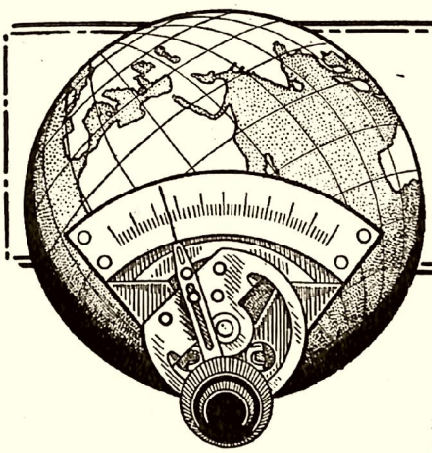

SHORT WAVE SECTION

At the Short-waver's Bench—10

Reaction Effects and Mains-fed Output Stages are Among the Subjects Dealt With in this Article

Dirty Contacts in the Short-wave Set

THE need for clean contacts in the short-waver cannot be emphasised too strongly, particularly in regard to the H.F. side of the circuit. This fact was recently brought home to me rather forcibly when my own short-waver refused to oscillate. It is of triple-range design, wave-changing being effected by means of two push-pull switches. It was not until one of these switches was rotated, and the contacts thus cleaned, that the set would work again. No trouble has ever arisen when the switch in question has been used in a broadcast-band set, nor in fact was any vestige of a dirty contact discernable. Nevertheless, it serves as a reminder of the desirability of seeing that all such contacts are electrically clean.

A Curious Aerial Coupling Effect

Incidentally, it was whilst using the set referred to above that an interesting method of increasing the volume was discovered. The circuit of the set shown in Fig. 1 is the conventional form of three-valve short-waver, incorporating an H.F. pentode across the grid circuit, of which the aerial is coupled by means of an H.F. choke. It was found that if the aerial was wound once round the intervalve short-wave coil and then led to the aerial terminal, a tremendous increase in sensitivity and volume resulted. This was definitely not due to the inefficiency of the H.F. stage, as with the aerial removed from the aerial terminal and merely wound around the coil, working the set as a two-valver, signals were very weak indeed. The increased efficiency was no doubt due to the aerial causing a certain amount of feed-back between the anode and grid of the H.F. valve. In other words, a minor form of reaction effect obtained which leads to the suggestion that the experiment of adding reaction to this valve might be tried. It should be possible to react into the H.F. choke, or a tuned circuit with reaction might be tried. In the latter case some careful screening would no doubt be required.

Variable Control of the Screening-grid

It will be noticed, by reference to Fig. 1, that the screening-grid voltage of the H.F. valve is obtained *via* a variable potentiometer. I have found that this assists to a great extent in obtaining the maximum sensitivity of the valve. In one of my sets the optimum position is quite critical, and enormously improved results are obtained by setting the potentiometer correctly. As readers doubtless are aware, variation of the screening-grid voltage can prove quite a useful reaction control, and such an arrangement may assist those who desire to carry out the suggestion outlined in the previous paragraph.

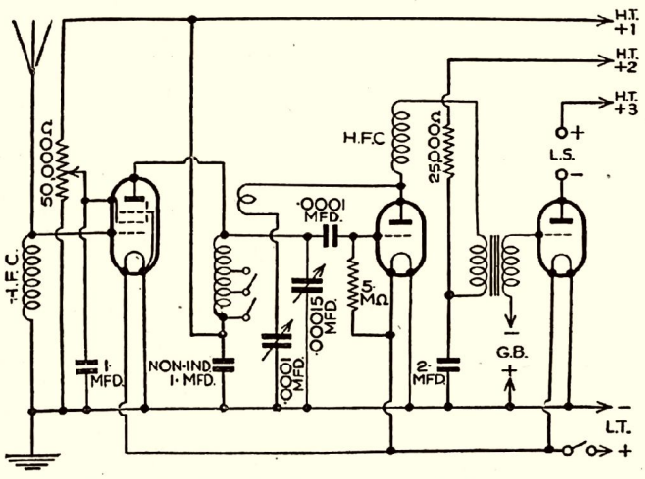

Fig. 1. (left)—To obtain maximum sensitivity in an H.F. stage, the S.G. potentiometer proves very valuable.

The Position of the Reaction Coil

Continuing to discuss reaction, here is a hint which may prove useful to those readers who prefer to use a short-waver without a pre-detector H.F. stage. It is in regard to the reaction coil which should be placed between the grid coil and the aerial coupling coil. The idea is shown in Fig. 2, and its advantages are, firstly, that, reaction being introduced into the aerial circuit, its damping effect is reduced and its losses are minimised; secondly, the aerial has a much less effect upon the tuning of the grid circuit, and dead spots, "wobble" due to the aerial swinging, and similar aerial troubles are very much lessened. An extension of this idea, but which has not all its advantages, is to combine the reaction and aerial coupling coil into one, as shown in Fig. 3. This is particularly useful where the advantages of a special aerial coupling coil are desired.

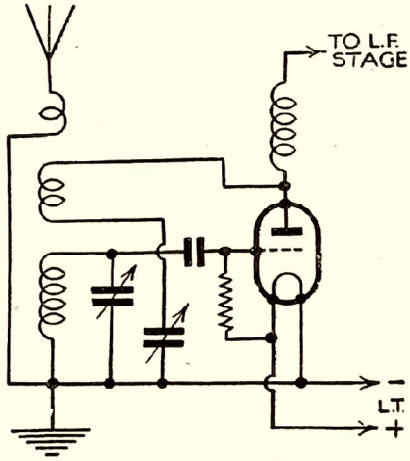

Fig. 2.—Improved reaction effects may be obtained by placing the reaction winding between the aerial and grid coils.

but the coil in use has not such a winding incorporated.

Mains-fed Output Stages

There is at present on the market an extremely useful pentode. It has an extraordinarily high value of mutual conductance providing a large output

(*Continued overleaf*)

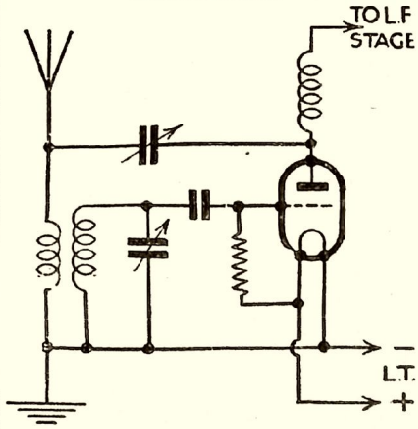

Fig. 3.—A modification of Fig. 2 which has some of its advantages.

AT THE SHORT-WAVER'S BENCH

(*Continued from previous page*)

from a small input. This means that one L.F. stage only is required, with a consequent minimising of background noises, valve noise, and hum, etc. The one snag for those who prefer battery short-wavers is that this valve is for use with A.C. mains. Many cannot bear the thought of an all-A.C. short-waver, due to the trouble in eradicating hum. Most of this trouble originates in the detector stage, and in Fig. 4 is shown a useful battery-cum-mains "two" in which the background should be as dead as an all-battery set, with the consequent advantage due to the use of the special mains pentode with a very large output. This particular circuit is suggested as a basis for experiment, but if it is built up as shown some loading will be required on the filament winding in order that the rise in voltage as a result of using only one valve may not overrun that valve's heater.

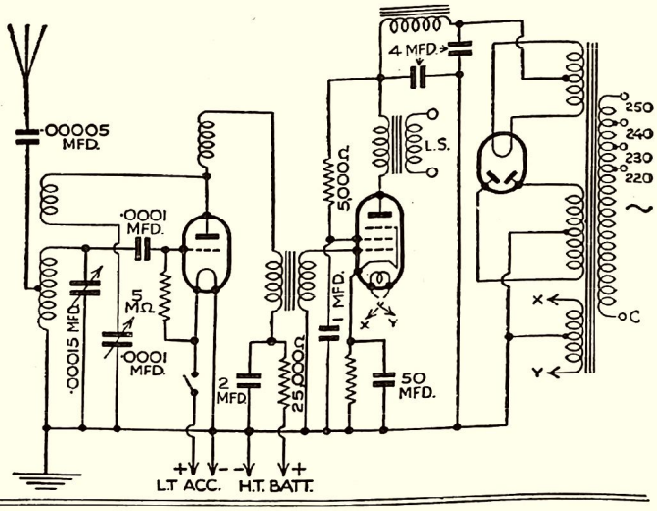

Fig. 4.—A suggested scheme for using a battery L.T. supply as well as a mains supply for a short-wave set. The use of the battery supply for the detector valve removes the risk of hum.